evonicfires
quality electric fires built in britain



E-LECTRA INSETS AND STOVES



The Royal Shakespeare Theatre situated on the River Avon in Stratford-upon-Avon

WHERE INNOVATION MEETS ELEGANCE!

Founded in 2005 in Stratford-upon-Avon, the heart of Shakespeare country, CK Fires Ltd are a multi-award-winning manufacturer. Our Evonic Fires brand is proud to produce a range of British built electric appliances and are considered as one of the most technically advanced manufacturers in the world. Our range has a heating solution to suit any interior, with a variety of styles, sizes and flame effects to choose from.

Adding an electric fire provides a comfortable and attractive solution for those looking to add warmth and style to their living space.



“We strive to design and deliver sustainable products that are aspirational and driven by technology through innovation.”

ANDREW COX | MANAGING DIRECTOR



UK MADE

Evonic Fires occupy a 30,000sq ft manufacturing facility and produce some of the most advanced electric fires in the world, creating an abundance of products to fit any interior. Using components sourced from leading UK suppliers and assembled at our factory premises, Evonic Fires strive to achieve excellence with every fire we despatch. You can also be confident that in choosing an Evonic Fires appliance you are supporting British jobs, reducing your carbon footprint through shorter supply chains, and investing in a product that is built to last.

CERTIFICATION

Our company, CK Fires Ltd, are both ISO 14001 and 9001 certified. Our ISO 14001 certification is for our Environmental Management System, which assists us in minimising our effect on the environment through more efficient use of our resources and reduction of our waste. Our ISO 9001 certification provides guidance for our Quality Management System, which assists us to fulfil requirements and ensure customer satisfaction, while continuously improving the effectiveness of our operations.

NIBE GROUP MEMBER

CK Fires Ltd is a group member of NIBE, a Swedish multinational company that specialises in energy-efficient and environmentally friendly heating solutions. NIBE is a world leader in heating technology, with a wide range of products and solutions for homes, commercial buildings, and industrial applications.



Here for you...

NATIONWIDE RETAILER NETWORK

With our extensive network of over 300 dedicated retailers, it has never been easier to find the Evonic fire you are looking for. Our website features a detailed search engine to locate your nearest Evonic Fires dealer, and you can even narrow the search down to find particular ranges or models using our product filter tool. Scan the QR code to view our retailers page.

CUSTOMER SERVICE

Our dedicated team work tirelessly to ensure we offer the highest calibre of customer service. The Evonic Fires sales department are always on hand to answer any queries you may have regarding our products before or after you make a purchase, and our knowledgeable service department will always have time to discuss any after sales questions, to ensure you are getting the best performance from your Evonic fire.

FIVE YEAR WARRANTY



All our products come with a five year cover as standard. For year one, parts and labour will be covered, and to qualify for the additional four years, parts only warranty, consumers will have to register their product on the Evonic Fires website within 30 days of purchase. During years two to five there will be a manufacturers chargeable service call out option. Scan the QR code to be taken to the product registration page.

Setting the mood...

CONTROLLING YOUR FIRE

Access and control the features of our fires through the e-smart cloud app on your phone or tablet. These fires are compatible with Amazon Alexa or Google Assistant for voice control. A remote handset comes as standard with all models, or can be integrated into a home automation system, such as Control 4.

LOW RUNNING COST

Use our Energy Cost Calculator to see how affordable an Evonic fire is by visiting our website **www.evonicfires.co.uk**

Based on a Halo 1500, the running cost, for 4 hours, using the flame effect only is less than 2p. Over the same period, but with turning the heat on, it's just over £1. *













*Energy usage based on a Halo 1500 fire. Prices are calculated using the UK: Energy Price Guarantee (July 2023) fixed unit rate of 30p per kWh. Please check your tariff for detailed cost of running. Prices rounded to nearest whole pence. Flame effect only calculation based on 4 hours usage. Heat calculation based on 4 hours of thermostatic usage with 50% duty cycle plus flame effect. Calculations do not include installation, maintenance, or servicing.

Fascia options



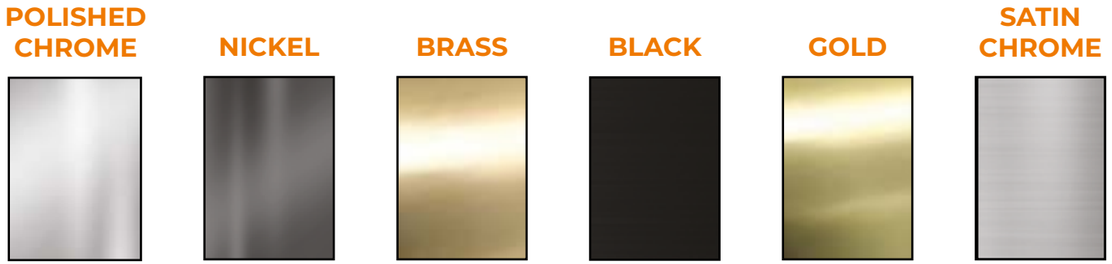

Model	Polished Chrome	Nickel	Brass	Black	Gold	Satin Chrome
Brooklyn	N/A	N/A	N/A	N/A	N/A	✓
Argenta	✓	✓	N/A	N/A	N/A	N/A
Strellar	✓	✓	N/A	✓	✓	N/A
Colorado	✓	✓	✓	✓	N/A	N/A
Detroit	N/A	N/A	N/A	✓	N/A	N/A



e-lectra effect

The **e-lectra** range from Evonic Fires harnesses cutting-edge LED technology, coupled with a hypnotic and modern flame picture. This mesmerising and virtually silent effect is available with 11 unique flame effects to choose from, and is available in all appliances within this brochure. Scan the QR code to view our **e-lectra** flame effect in action.

e-lectra C1



At 300mm in depth, the new e-lectra C1 model is the deepest inset in the Evonic Fires range. Designed to seamlessly fit into a standard 16" x 22" opening, the C1 incorporates reflective side panels to further enhance the flame picture and highlight the expanse of this superb fire.

Specifications

- Concealed 750/1500W heat output
- 300mm full depth fuel bed or reduce to 225mm with optional spacer
- Choose one of five distinct fascia options
- See page 11 for finish options
- Glass fronted
- Remote or e-smart cloud app control
- Authentic log fuel bed
- Depth enhancing, reflective side panels
- Works with Amazon Alexa and Google Assistant
- 11 flame effects to choose from



Colorado fascia shown in polished chrome



Strellar fascia shown in polished chrome



e-lectra C1
flame effect

Argenta fascia shown in nickel

e-lectra C2



With a depth of 200mm, the new e-lectra C2 model harnesses the same impressive features as the C1. With its impressive flame window, and a choice of 11 varying flame effects, the C2 is sure to be the centrepiece your living room deserves.

Specifications

- Concealed 750/1500W heat output
- 200mm mid depth fuel bed or reduce to 125mm with optional spacer
- Choose one of five distinct fascia options
- See page 11 for finish options
- Glass fronted
- Remote or e-smart cloud app control
- Authentic log fuel bed
- Depth enhancing, reflective side panels
- Works with Amazon Alexa and Google Assistant
- 11 flame effects to choose from


Strellar fascia shown in black


Detroit fascia shown in black



Brooklyn fascia shown in satin chrome

e-lectra C3

The e-lectra C3 is an ideal choice for customers who require an exceptional, standard 150mm depth inset. Customers can choose from five distinct fascia options to perfectly suit their décor, with the added comfort of controlling the features of their fire from the comfort of their sofa.

Specifications

- Concealed 750/1500W heat output
- 150mm in depth or reduce to 75mm with optional spacer
- Choose one of five distinct fascia options
- See page 11 for finish options
- Glass fronted
- Remote or e-smart cloud App control
- Authentic log fuel bed
- Depth enhancing, reflective side panels
- Works with Amazon Alexa and Google Assistant
- 11 flame effects to choose from



Argenta fascia shown in nickel



Detroit fascia shown in black



Colorado fascia shown in brass

e-lectra C600

The new e-lectra C600 stove is a perfect all-rounder. The versatility this model offers when deciding on installation is a huge benefit, with the C600 being easily installed into fireplace hearths or wall cavities to create an impressive focal point.

Specifications

- Concealed 750/1500W heat output
- Available with 3 or 4-sided frame
- British woodland real log set
- SCHOTT® Clear float front glass
- Two fitting configurations available - Floor based or wall insert
- Simple, cassette-style installation
- Finished in matt black
- Remote or e-smart cloud app control
- Works with Amazon Alexa and Google Assistant
- 11 flame effects to choose from



C600 4-sided model shown



British Woodland real log set

e-lectra
C600
flame effect



C600 3-sided model shown

e-lectra Banff

With its hypnotic flame display and British Woodland real log set, the e-lectra Banff is the latest, striking addition to the Evonic stove family. This plug-and-play stove requires minimal installation and setup, so you can sit back and enjoy the ambient warmth in no time.

Specifications

- 750/1500W heat output
- Freestanding for easy install
- British Woodland real log set
- 3-sided viewing windows
- Curved front door
- Full steel construction
- Remote or e-smart cloud app control
- Works with Amazon Alexa and Google Assistant
- 11 flame effects to choose from





British Woodland real log set



Specifications

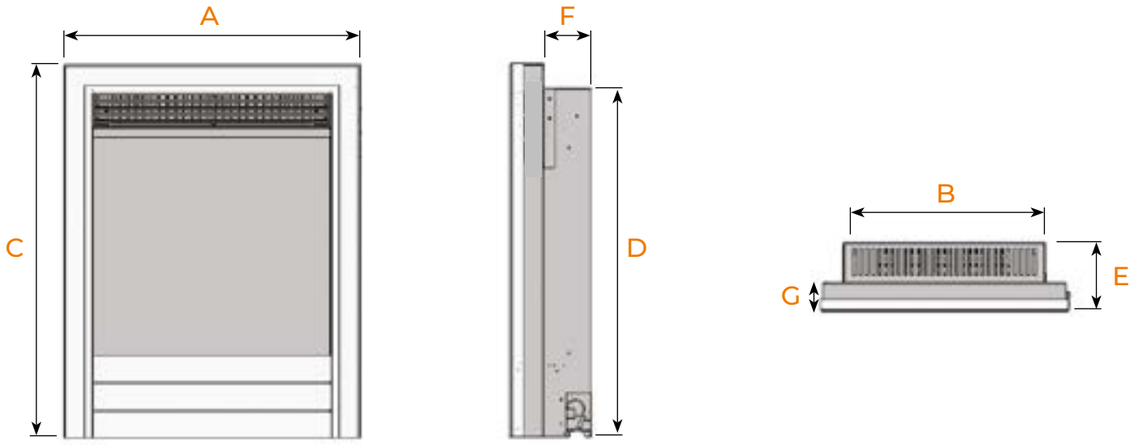

SPACER OPTIONS

Can't find a model that suits the depth of your fire? A spacer may be exactly what you need! Our **75mm** spacer frame can be easily fitted to the rear of all **C1, C2** and **C3** inset models, and will reduce the required depth of the inset by 75mm.



Dimensions

Model	Width		Height		Depth		
	Overall (A)	Insert (B)	Overall (C)	Insert (D)	Overall (E)	Insert (F)	Frame (G)
C1 Strellar	515mm	382mm	615mm	550mm	425mm	300mm	125mm
C1 Argenta	464mm	382mm	590mm	550mm	352mm	300mm	52mm
C1 Colorado	460mm	382mm	605mm	550mm	355mm	300mm	55mm
C1 Detroit	460mm	382mm	590mm	550mm	405mm	300mm	105mm
C2 Brooklyn	490mm	382mm	605mm	550mm	280mm	200mm	80mm
C2 Strellar	515mm	382mm	615mm	550mm	325mm	200mm	125mm
C2 Argenta	464mm	382mm	590mm	550mm	252mm	200mm	52mm
C2 Colorado	460mm	382mm	605mm	550mm	255mm	200mm	55mm
C2 Detroit	460mm	382mm	590mm	550mm	305mm	200mm	105mm
C3 Brooklyn	490mm	382mm	605mm	550mm	230mm	150mm	80mm
C3 Strellar	515mm	382mm	615mm	550mm	275mm	150mm	125mm
C3 Argenta	464mm	382mm	590mm	550mm	202mm	150mm	52mm
C3 Colorado	460mm	382mm	605mm	550mm	205mm	150mm	55mm
C3 Detroit	460mm	382mm	590mm	550mm	255mm	150mm	105mm
e-lectra C600 3	693mm	600mm	546mm	500mm	302mm	302mm	7mm
e-lectra C600 4	693mm	600mm	579mm	500mm	302mm	302mm	7mm
e-lectra Banff	460mm	N/A	670mm	N/A	355mm	N/A	N/A



Download our brochures by scanning the QR code or from our website **www.evonicfires.co.uk**

Manufacturd in the United Kingdom. The images in this brochure are produced using photography and CGI. Although the utmost care has been taken to accurately portray our products, we always advise a viewing in person at an approved Evonic Fires retailer's showroom. Evonic Fires pride itself on constant development and improvement. Product descriptions are accurate at the time of publishing but are subject to change.

Images of fireplace hearths supplied by **Trent Fireplaces - www.trent-fireplaces.co.uk | 0115 979 0330.**

evonicfires

DEALER STAMP

ISSUE 01

+44 (0) 1789 263868 | sales@evonicfires.co.uk | www.evonicfires.co.uk